Display Elektronik GmbH

# DATA SHEET

## TFT MODULE

# DEM 800480E TMH-PW-N (C3-TOUCH)

## 5.0“ TFT + PCT

***Product Specification*** ***Ver.: 0***

**08.07.2019**

Revise Records

| Rev. | Date | Contents | Written | Approved |
|---|---|---|---|---|
| 0 | 08.07.2019 | Preliminary Specification | J | MHI |
| | | | | |
| | | | | |
| | | | | |
| | | | | |
| | | | | |
| | | | | |
| | | | | |
| | | | | |
| | | | | |
| | | | | |

Special Notes

| | |
|---|---|
| Note1. | |
| Note2. | |
| Note3. | |
| Note4. | |
| Note5. | |
| | |
| | |
| | |
| | |
| | |
| | |
| | |
| | |
| | |
| | |

# Contents


| | | |
|---|---|---|
| **1.** | **General Description and Features** | 4 |
| **2.** | **Mechanical Information** | 4 |
| **3.** | **Electrical Specifications** | 5 |
| **4.** | **Optical Characteristics** | 11 |
| **5.** | **I/O Terminal** | 14 |
| **6.** | **Displayed Color and Input Data** | 16 |
| **7.** | **Projected capacitive touch Screen Panel Specifications** | 17 |
| **8** | **Reliability Condition** | 20 |
| **9** | **Dimensional Outlines** | 21 |
| **10** | **Incoming Inspection Standards** | 22 |

## 1. General Description and Features

DEM 800480E TMH-PW-N(C3-TOUCH) is a transmissive type color active matrix TFT (Thin Film Transistor) liquid crystal display (LCD) that uses amorphous silicon TFT as a switching device. This model is composed of a TFT-LCD module, a driver circuit, projected capacitive touch panel and a back-light unit. Graphics and texts can be displayed on a WVGA 800 (W) x 3 x 480 (H) dots (15:9 aspect ratio) with 16.7M colors by supplying 24 bits data signal (8 bits/each color). The following table described the features of DEM 800480E TMH-PW-N(C3-TOUCH).

### 1.1 Features

- Transmissive and back-light with 14 LEDs are available.
- TN (Twisted Nematic) mode.
- Digital RGB (8 bits/color) data transfer.
- Data enable mode.
- Projected capacitive touch panel
- ROHS Compliance

### 1.2 LCD Module

| Item | Specification | Unit |
|---|---|---|
| Screen Size | 5.0 Inches | Diagonal |
| Display Resolution | 800 x 480 | Pixel |
| Active Area | 108.00 x 64.80 | mm |
| Outline Dimension | 126.50 x 85.55 x 5.30 | mm |
| Display Mode | Normally White Mode / Transmissive | -- |
| Pixel Arrangement | R,G,B Vertical Stripe | -- |
| Pixel Size | 0.1350 x 0.1350 | mm |
| Display Color | 16.7 Million | -- |
| Viewing Direction | 6 o'clock (Gray Inversion) | -- |
| Input Interface | Digital RGB (8 bits/color) Data Transfer | -- |

## 2. Mechanical Information

| Item | | Min. | Typ. | Max. | Unit | Note |
|---|---|---|---|---|---|---|
| Module Size | Horizontal (H) | -- | 126.50 | -- | mm | |
| | Vertical (V) | -- | 85.55 | -- | mm | |
| | Thickness (T) | -- | 5.30 | -- | mm | (1) |
| Weight | | -- | -- | TBD | -- | -- |

Note (1) Not Include Component . Refer to the Outline Dimension Drawing as attached.

# 3. Electrical Specifications

## 3.1 Absolute Max. Ratings

### 3.1.1 Absolute Ratings of Environment

If the operating condition exceeds the following absolute maximum ratings, the TFT LCD module may be damaged permanently.

(Ta=25±2°C, $V_{SS}$=GND=0)

| Item | Symbol | Min. | Max. | Unit | Note |
|---|---|---|---|---|---|
| Storage Temperature | $T_{STG}$ | -30 | 80 | °C | (1) |
| Operating Temperature | $T_{OPR}$ | -20 | 70 | °C | (1,2,3) |

Note (1) 95 % RH Max. ( 40 °C ≥ Ta ). Maximum wet-bulb temperature at 39 °C or less. (Ta > 40 °C) No condensation.

Note (2) In case of below 0°, the response time of liquid crystal (LC) becomes slower and the color of panel becomes darker than normal one. Level of retardation depends on temperature, because of LC's character

Note (3) Only operation is guarantied at operating temperature. Contrast, response time, another display quality are evaluated at +25°C.

3.1.2 Electrical Absolute Maximum Ratings

($V_{SS}$=GND=0)

| Parameter | Symbol | Min. | Max. | Unit | Remark |
|---|---|---|---|---|---|
| Power Supply Voltage | $V_{DD}$ | -0.5 | 5.0 | V | |
| Signal Input Voltage | R0-R7,G0-G7, B0-B7,DCLK,DE,HS,VS | -0.3 | VDD+0.3 | V | -- |
| Permissive Input Ripple Voltage | $V_{RF}$ | -- | 100 | mVp-p | $V_{DD}$=+3.3V |

Display On/Off Sequence :

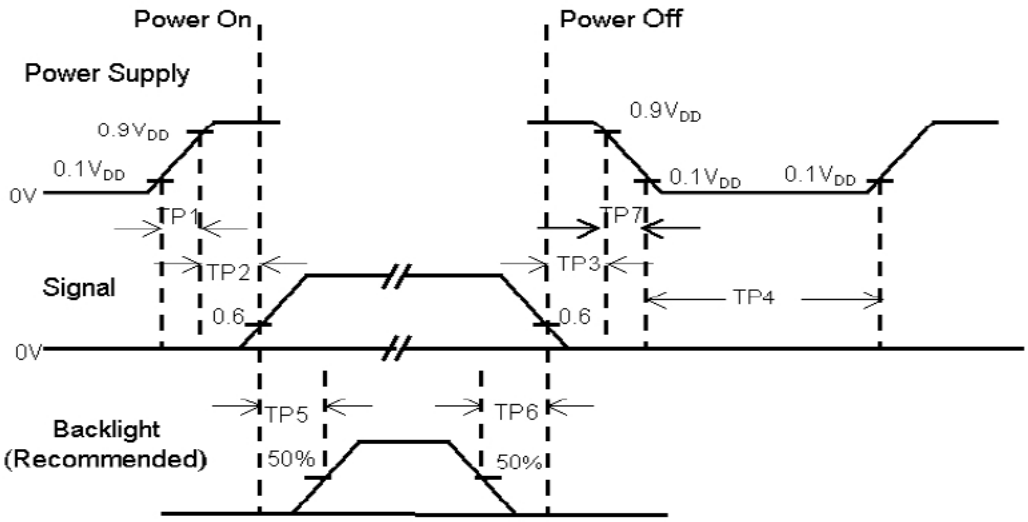


**Note :**

(1) The supply voltage of the external system for the module input should be the same as the definition of $V_{DD}$.

(2) Apply the lamp volatge within the LCD operation range. When the back-light turns on before the LCD operation or the LCD truns off before the back-light turns off, the display may momentarily become white.

(3) In case of VDD = off level, please keep the level of input signal on the low or keep a high impedance.

(4) TP4 should be measured after the module has been fully discharged between power off and on period.

(5) Interface signal shall not be kept at high impedance when the power is on.

### 3.1.3 DC Electrical Characteristics of the TFT LCD

(Ta=25±2°C, $V_{SS}$=GND=0)

| Item | | Symbol | Min. | Typ. | Max. | Unit | Remark |
|---|---|---|---|---|---|---|---|
| Power Supply | | VDD | 3.0 | 3.3 | 3.6 | V | |
| Input Voltage for Logic | H Level | VIH | 0.7xVDD | - | VDD | V | |
| | L Level | VIL | 0 | - | 0.3xVDD | V | |
| Power Supply Current | | IDD | - | (220) | (250) | mA | Note 1 |

Note1: fv =60Hz , Ta=25°C , Display pattern : Black pattern

Black Pattern / 0 Gray

Active Area

### 3.2 AC Timing Characteristic of The LCD

3.2.1 Timing Condition (DE only mode)

| Signal | Parameter | Symbol | Min. | Typ. | Max. | Unit. | Remark |
|---|---|---|---|---|---|---|---|
| DCLK | DCLK cycle time | $T_{cph}$ | 25 | - | - | ns | |
| | DCLK Frequency | $f_{clk}$ | - | 30 | 40 | MHz | |
| | DCLK High plus width | $T_{cwh}$ | 40 | 50 | 60 | % | |
| Horizontal | HSD setup time | $T_{hst}$ | 8 | - | - | ns | |
| | HSD hold time | $T_{hhd}$ | 8 | - | - | ns | |
| | Horizontal display area | $t_{hd}$ | - | 800 | - | Tcph | |
| | HSD period time | th | - | 928 | - | Tcph | |
| | HSD pulse width | $t_{hpw}$ | 1 | 48 | - | Tcph | |
| | HSD back porch | $t_{hb}$ | - | 40 | - | Tcph | |
| | HSD front porch | $t_{hfp}$ | - | 40 | - | Tcph | |
| Vertical | VSD setup time | $T_{vst}$ | 8 | - | - | ns | |
| | VSD hold time | $T_{vhd}$ | 8 | - | - | ns | |
| | Vertical display area | $t_{vd}$ | - | 480 | - | th | |
| | VSD period time | $t_{v}$ | - | 525 | - | th | |
| | VSD pulse width | $t_{vpw}$ | - | 3 | - | th | |
| | VSD back porch | $t_{vb}$ | - | 29 | - | th | |
| | VSD front porch | $t_{vfp}$ | - | 13 | - | th | |
| DE | DE setup time | $T_{esu}$ | 8 | - | - | ns | |
| | DE hold time | $T_{ehd}$ | 8 | - | - | ns | |
| DATA | Data setup time | $T_{dsu}$ | 8 | - | - | ns | |
| | Data hold time | $T_{dhd}$ | 8 | - | - | ns | |

3.2.2 Timing Characteristic

3.2.2.1 DE and RGB Input Timing

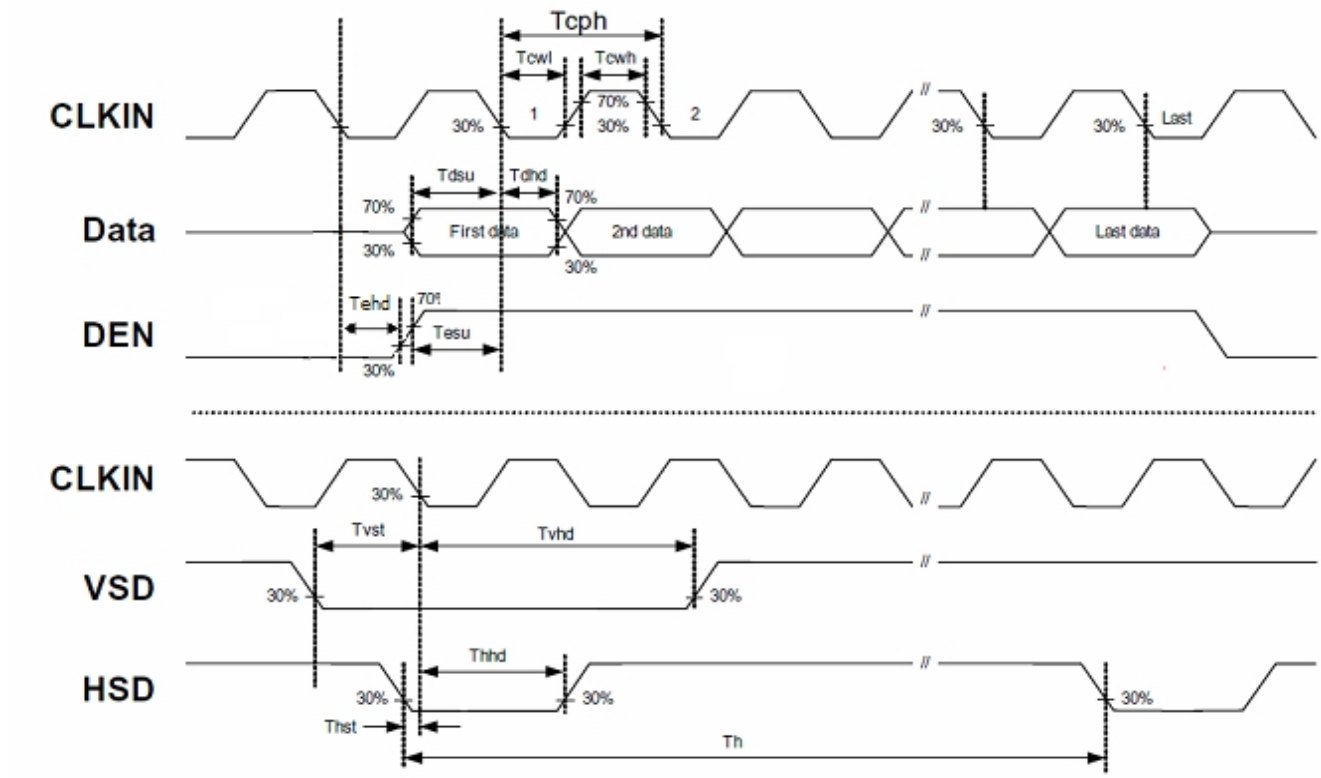


**Sampling clock timing**

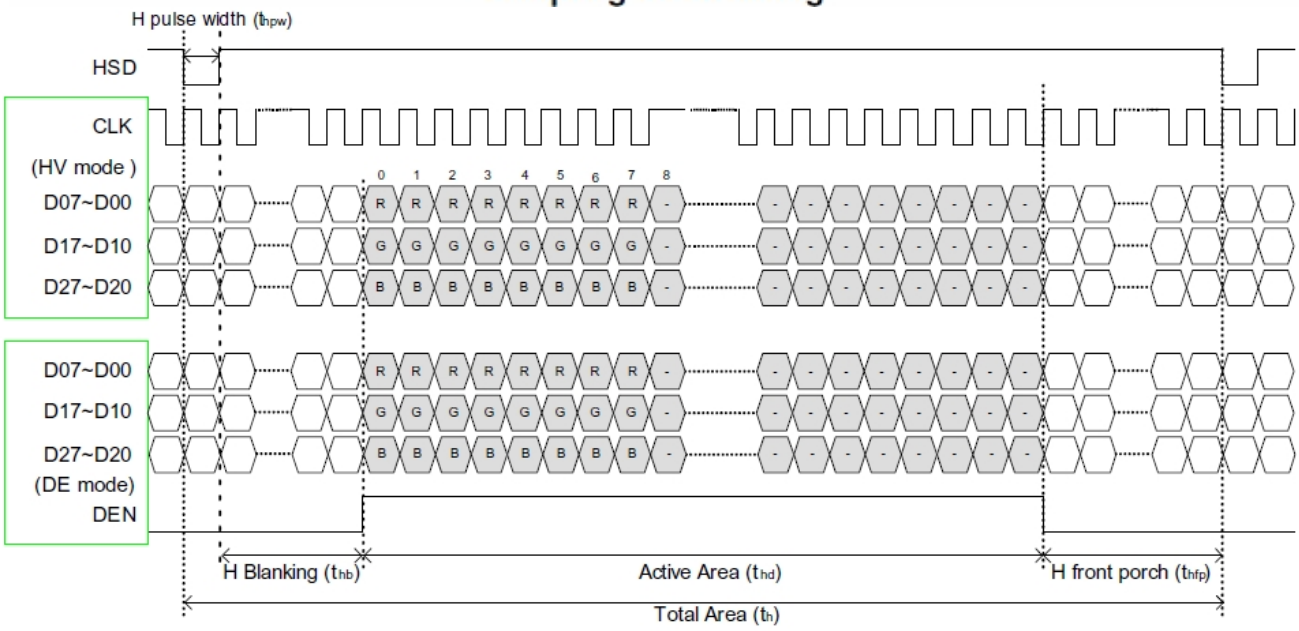


**Horizontal display timing range**

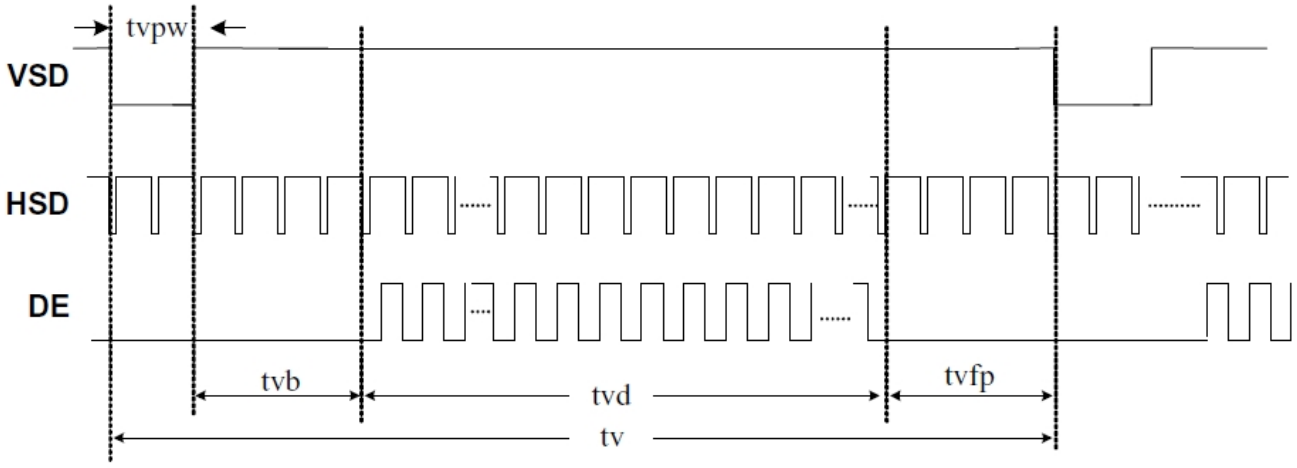


**Vertical timing**

### 3.3 Back-Light Unit

The Back-light system is an edge-lighting type with 14 white LEDs (Light Emitting Diode). The characteristics of 14 white LEDs are shown in the following tables.

(Ta= Room Temp)

| Characteristics | Symbol | Min. | Typ. | Max. | Unit | Note |
|---|---|---|---|---|---|---|
| Forward Voltage | $V_f$ | 21 | 23.1 | 23.8 | V | |
| Forward Current | $I_f$ | - | 40 | 50 | mA | (1) |
| Power Consumption | $P_{BL}$ | - | 924 | 1190 | mW | (2) |
| LED Lifetime | - | 50000 | - | - | hr | (3) |

Note (1) LEDs in 7 series x 2 parallel type.

(2) Where $I_f$ = 40mA, $V_f$ = 23.1, $P_{BL} = V_F \times I_f$

(3) The environmental conducted under ambient air flow ,at Ta=25±2℃, 60%RH±5%

## 4. Optical Characteristics

### 4.1 Optical characteristic of the LCD

The following items are measured under stable conditions. The optical characteristics should be measured in a dark room or equivalent state with the methods.

Measuring equipment: BM-7A

| Item | | Symbol | Condition | Min | Type | Max | Unit | Note |
|---|---|---|---|---|---|---|---|---|
| Brightness | | B | | 320 | 400 | -- | cd/m$^2$ | |
| Response Time | | $T_r$ | θ=0° | - | 3 | 6 | ms | . |
| | | $T_f$ | | -- | 7 | 14 | ms | |
| Contrast Ratio | | CR | At optimized viewing angle | 480 | 600 | -- | -- | |
| Luminance Uniformity | | △L | | 70 | 80 | | % | |
| Color Chromaticity (CIE 1931) | White | Wx | θ=0° Normal Viewing Angle | 0.277 | 0.307 | 0.337 | -- | BM-7A |
| | | Wy | | 0.318 | 0.348 | 0.378 | | |
| Viewing Angle (6H) | Hor. | $\theta_R$ | CR≥10 | 65 | 75 | -- | Degree | |
| | | $\theta_L$ | | 65 | 75 | -- | | |
| | Ver. | $\theta_U$ | | 50 | 60 | -- | | |
| | | $\theta_D$ | | 60 | 70 | -- | | |

a. Test equipment setup

After stabilizing and leaving the panel alone shall be warmed up for the stable operation of LCM, the measurement should be executed. Measurement should be executed in a stable, windless, and dark room. Optical specifications are measured by Topcon BM-7(fast) with a viewing angle of 2° at a distance of 50cm and normal direction.

b. Definition of response time: Tr and Tf

The response time is defined as the following figure and shall be measured by switching the input signal for “black” and “white”.

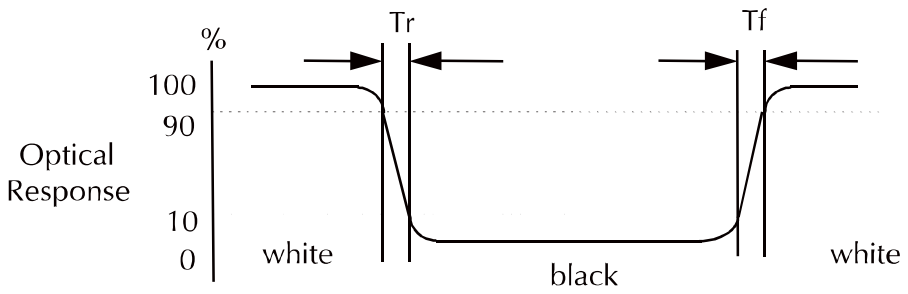


c. Definition of contrast ratio:

$$\text{Contrast Ratio (CR)} = \frac{\text{Brightness measured when LCD is at “white state”}}{\text{Brightness measured when LCD is at “black state”}}$$

d. Measured at the center area of the panel when all the input terminals of LCD panel are electrically opened.

e. View Angle

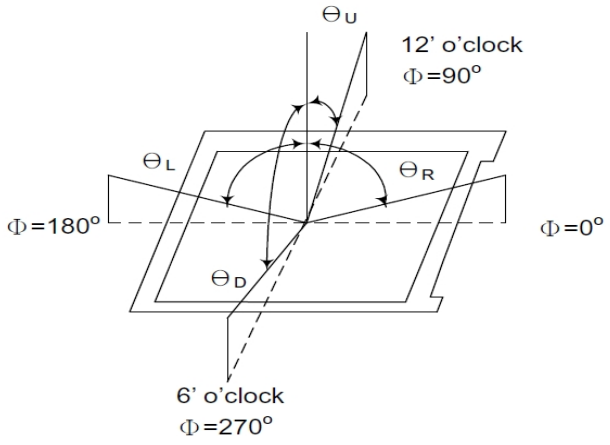


f. Definition of Luminance of White: Luminance of white at the center points

| | |
|---|---|
| Light Source of Back-Light Unit | LED Type |

g. Definition of White Uniformity

$$\text{White Uniformity} = \frac{\text{Min. luminance of white among 9-points}}{\text{Max. luminance of white among 9-points}} \times 100\%$$

h. The definition of Color Gamut -Color Chromaticity CIE 1931

Color coordinate of white & red, green, blue at center point.

Color Gamut : NTSC(%) = ( RGB Triangle Area / NTSC Triangle Area ) x 100

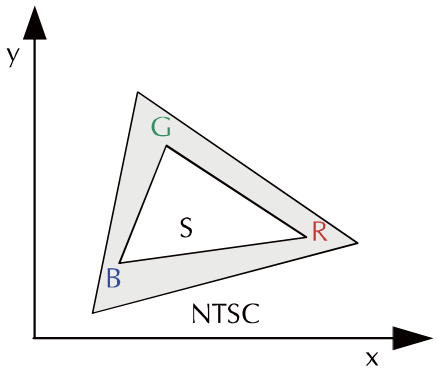

## 5. I/O Terminal

### 5.1 Pin Assignment

| Pin No. | Symbol | I/O | Function | Remark |
|---|---|---|---|---|
| 1 | VLED- | P | Power for LED backlight cathode | |
| 2 | VLED+ | P | Power for LED backlight anode | |
| 3 | GND | P | Power Ground | |
| 4 | VDD | P | Power Supply | |
| 5 | R0 | I | Red data signal (LSB) | |
| 6 | R1 | I | Red data signal | |
| 7 | R2 | I | Red data signal | |
| 8 | R3 | I | Red data signal | |
| 9 | R4 | I | Red data signal | |
| 10 | R5 | I | Red data signal | |
| 11 | R6 | I | Red data signal | |
| 12 | R7 | I | Red data signal (MSB) | |
| 13 | G0 | I | Green data signal (LSB) | |
| 14 | G1 | I | Green data signal | |
| 15 | G2 | I | Green data signal | |
| 16 | G3 | I | Green data signal | |
| 17 | G4 | I | Green data signal | |
| 18 | G5 | I | Green data signal | |
| 19 | G6 | I | Green data signal | |
| 20 | G7 | I | Green data signal (MSB) | |
| 21 | B0 | I | Blue data signal (LSB) | |
| 22 | B1 | I | Blue data signal | |
| 23 | B2 | I | Blue data signal | |
| 24 | B3 | I | Blue data signal | |
| 25 | B4 | I | Blue data signal | |
| 26 | B5 | I | Blue data signal | |
| 27 | B6 | I | Blue data signal | |
| 28 | B7 | I | Blue data signal (MSB) | |
| 29 | DGND | P | Digital ground | |
| 30 | DCLK | I | Pixel clock | |
| 31 | DISP | I | Display on/ off | |
| 32 | HSYNC | I | Horizontal sync signal | |
| 33 | VSYNC | I | Vertical sync signal | |
| 34 | DE | I | Data Enable signal | |
| 35 | NC | I | No Connect | |
| 36 | GND | P | Power Ground | |
| 37 | NC | - | No connect | |
| 38 | NC | - | No connect | |
| 39 | NC | - | No connect | |
| 40 | NC | - | No connect | |

: Input, O: Output, P: Power

Notes:

1) NC Pin must be retained; this pin can't contact GND or other signal.
2) GND Pin must ground contact, can not be floating.
3) Connector Part No: FH12A-40S-0.5SH (55)or equivalent.

### 5.2 Block Diagram

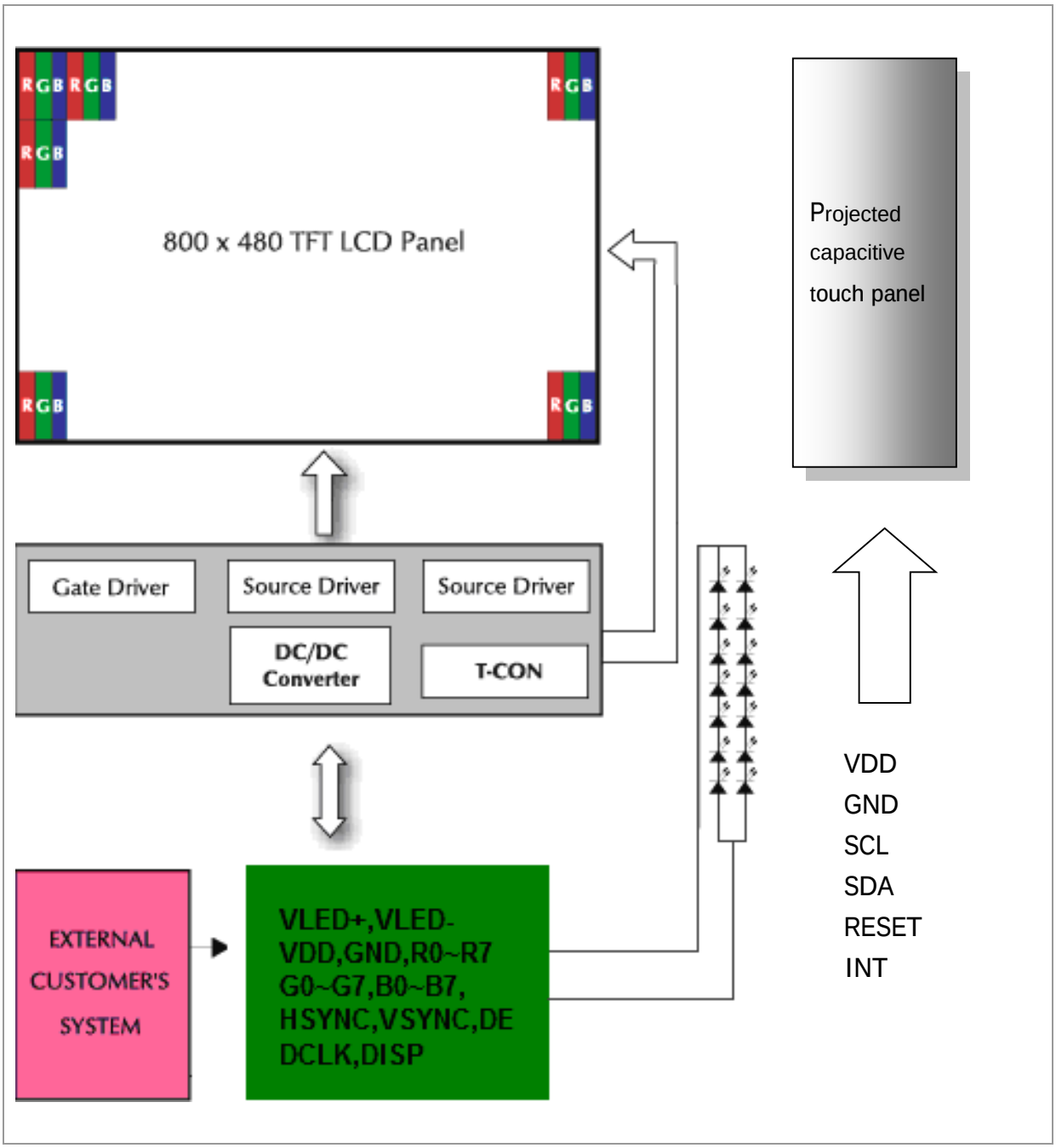

## 6. Displayed Color and Input Data

| | Color & Gray Scale | Data Signal | | | | | | | | | | | | | | | | | | | | | | | |
|---|---|---|---|---|---|---|---|---|---|---|---|---|---|---|---|---|---|---|---|---|---|---|---|---|---|
| | | R7 | R6 | R5 | R4 | R3 | R2 | R1 | R0 | G7 | G6 | G5 | G4 | G3 | G2 | G1 | G0 | B7 | B6 | B5 | B4 | B3 | B2 | B1 | B0 |
| Basic Color | Black | 0 | 0 | 0 | 0 | 0 | 0 | 0 | 0 | 0 | 0 | 0 | 0 | 0 | 0 | 0 | 0 | 0 | 0 | 0 | 0 | 0 | 0 | 0 | 0 |
| | Red | 1 | 1 | 1 | 1 | 1 | 1 | 1 | 1 | 0 | 0 | 0 | 0 | 0 | 0 | 0 | 0 | 0 | 0 | 0 | 0 | 0 | 0 | 0 | 0 |
| | Green | 0 | 0 | 0 | 0 | 0 | 0 | 0 | 0 | 1 | 1 | 1 | 1 | 1 | 1 | 1 | 1 | 0 | 0 | 0 | 0 | 0 | 0 | 0 | 0 |
| | Blue | 0 | 0 | 0 | 0 | 0 | 0 | 0 | 0 | 0 | 0 | 0 | 0 | 0 | 0 | 0 | 0 | 1 | 1 | 1 | 1 | 1 | 1 | 1 | 1 |
| | Cyan | 0 | 0 | 0 | 0 | 0 | 0 | 0 | 0 | 1 | 1 | 1 | 1 | 1 | 1 | 1 | 1 | 1 | 1 | 1 | 1 | 1 | 1 | 1 | 1 |
| | Magenta | 1 | 1 | 1 | 1 | 1 | 1 | 1 | 1 | 0 | 0 | 0 | 0 | 0 | 0 | 0 | 0 | 1 | 1 | 1 | 1 | 1 | 1 | 1 | 1 |
| | Yellow | 1 | 1 | 1 | 1 | 1 | 1 | 1 | 1 | 1 | 1 | 1 | 1 | 1 | 1 | 1 | 1 | 0 | 0 | 0 | 0 | 0 | 0 | 0 | 0 |
| | White | 1 | 1 | 1 | 1 | 1 | 1 | 1 | 1 | 1 | 1 | 1 | 1 | 1 | 1 | 1 | 1 | 1 | 1 | 1 | 1 | 1 | 1 | 1 | 1 |
| Red | Black | 0 | 0 | 0 | 0 | 0 | 0 | 0 | 0 | 0 | 0 | 0 | 0 | 0 | 0 | 0 | 0 | 0 | 0 | 0 | 0 | 0 | 0 | 0 | 0 |
| | Red(1) | 0 | 0 | 0 | 0 | 0 | 0 | 0 | 1 | 0 | 0 | 0 | 0 | 0 | 0 | 0 | 0 | 0 | 0 | 0 | 0 | 0 | 0 | 0 | 0 |
| | Red(2) | 0 | 0 | 0 | 0 | 0 | 0 | 1 | 0 | 0 | 0 | 0 | 0 | 0 | 0 | 0 | 0 | 0 | 0 | 0 | 0 | 0 | 0 | 0 | 0 |
| | : | : | : | : | : | : | : | : | : | : | : | : | : | : | : | : | : | : | : | : | : | : | : | : | : |
| | Red(127) | 0 | 1 | 1 | 1 | 1 | 1 | 1 | 1 | 0 | 0 | 0 | 0 | 0 | 0 | 0 | 0 | 0 | 0 | 0 | 0 | 0 | 0 | 0 | 0 |
| | : | : | : | : | : | : | : | : | : | : | : | : | : | : | : | : | : | : | : | : | : | : | : | : | : |
| | Red(254) | 1 | 1 | 1 | 1 | 1 | 1 | 1 | 0 | 0 | 0 | 0 | 0 | 0 | 0 | 0 | 0 | 0 | 0 | 0 | 0 | 0 | 0 | 0 | 0 |
| | Red(255) | 1 | 1 | 1 | 1 | 1 | 1 | 1 | 1 | 0 | 0 | 0 | 0 | 0 | 0 | 0 | 0 | 0 | 0 | 0 | 0 | 0 | 0 | 0 | 0 |
| Green | Black | 0 | 0 | 0 | 0 | 0 | 0 | 0 | 0 | 0 | 0 | 0 | 0 | 0 | 0 | 0 | 0 | 0 | 0 | 0 | 0 | 0 | 0 | 0 | 0 |
| | Green(1) | 0 | 0 | 0 | 0 | 0 | 0 | 0 | 0 | 0 | 0 | 0 | 0 | 0 | 0 | 0 | 1 | 0 | 0 | 0 | 0 | 0 | 0 | 0 | 0 |
| | Green(2) | 0 | 0 | 0 | 0 | 0 | 0 | 0 | 0 | 0 | 0 | 0 | 0 | 0 | 0 | 1 | 0 | 0 | 0 | 0 | 0 | 0 | 0 | 0 | 0 |
| | : | : | : | : | : | : | : | : | : | : | : | : | : | : | : | : | : | : | : | : | : | : | : | : | : |
| | Green(127) | 0 | 0 | 0 | 0 | 0 | 0 | 0 | 0 | 0 | 1 | 1 | 1 | 1 | 1 | 1 | 1 | 0 | 0 | 0 | 0 | 0 | 0 | 0 | 0 |
| | : | : | : | : | : | : | : | : | : | : | : | : | : | : | : | : | : | : | : | : | : | : | : | : | : |
| | Green(254) | 0 | 0 | 0 | 0 | 0 | 0 | 0 | 0 | 1 | 1 | 1 | 1 | 1 | 1 | 1 | 0 | 0 | 0 | 0 | 0 | 0 | 0 | 0 | 0 |
| | Green(255) | 0 | 0 | 0 | 0 | 0 | 0 | 0 | 0 | 1 | 1 | 1 | 1 | 1 | 1 | 1 | 1 | 0 | 0 | 0 | 0 | 0 | 0 | 0 | 0 |
| Blue | Black | 0 | 0 | 0 | 0 | 0 | 0 | 0 | 0 | 0 | 0 | 0 | 0 | 0 | 0 | 0 | 0 | 0 | 0 | 0 | 0 | 0 | 0 | 0 | 0 |
| | Blue(1) | 0 | 0 | 0 | 0 | 0 | 0 | 0 | 0 | 0 | 0 | 0 | 0 | 0 | 0 | 0 | 0 | 0 | 0 | 0 | 0 | 0 | 0 | 0 | 1 |
| | Blue(2) | 0 | 0 | 0 | 0 | 0 | 0 | 0 | 0 | 0 | 0 | 0 | 0 | 0 | 0 | 0 | 0 | 0 | 0 | 0 | 0 | 0 | 0 | 1 | 0 |
| | : | : | : | : | : | : | : | : | : | : | : | : | : | : | : | : | : | : | : | : | : | : | : | : | : |
| | Blue(127) | 0 | 0 | 0 | 0 | 0 | 0 | 0 | 0 | 0 | 0 | 0 | 0 | 0 | 0 | 0 | 0 | 0 | 1 | 1 | 1 | 1 | 1 | 1 | 1 |
| | : | : | : | : | : | : | : | : | : | : | : | : | : | : | : | : | : | : | : | : | : | : | : | : | : |
| | Blue(254) | 0 | 0 | 0 | 0 | 0 | 0 | 0 | 0 | 0 | 0 | 0 | 0 | 0 | 0 | 0 | 0 | 1 | 1 | 1 | 1 | 1 | 1 | 1 | 0 |
| | Blue(255) | 0 | 0 | 0 | 0 | 0 | 0 | 0 | 0 | 0 | 0 | 0 | 0 | 0 | 0 | 0 | 0 | 1 | 1 | 1 | 1 | 1 | 1 | 1 | 1 |

0 : Low level voltage, 1 :High level voltage

Each basic color can be displayed in 256 gray scales from 8 bit data signals. With the combination of total 24 bit data signals, the 16.7M color display can be achieved on the screen.

## 7. Projected capacitive touch Screen Panel Specifications

### 7.1 Features

| Item | Specification | Unit |
|---|---|---|
| Screen Size | 5.0 Inches | Diagonal |
| Type | Transparent Type Projected Capacitive Touch Panel | -- |
| Input Mode | Human's Finger | -- |
| Sensor Active Area | 108.00 × 64.80 | mm |
| Interface | I2C | -- |
| Cover glass pencil-handness | 6H(min) by JIS K5400 | -- |
| Digital Power Supply | 3.3 | V |
| Power Consumption | TBD | mA |
| IC Solution | IC：FT5446 | |

### 7.2 Electrical Characteristics

| Item | | Symbol | Specifications | | | Unit | Note |
|---|---|---|---|---|---|---|---|
| | | | MIN. | TYP. | MAX. | | |
| Interface | | -- | | I2C | | -- | -- |
| Power Supply | | VDD | 2.8 | 3.3 | 3.6 | V | -- |
| Input Signal Voltage | H Level | VIH | 0.7*IOVCC | -- | IOVCC | V | -- |
| | L Level | VIL | -0.3 | -- | 0.3*0.7*IOVCC | | -- |
| Output Signal Voltage | H Level | VOH | 0.7*IOVCC | -- | -- | V | -- |
| | L Level | VOL | -- | -- | 0.3*0.7*IOVCC | | -- |
| I/O Leakage Current | | ILI | -1 | -- | 1 | μA | -- |
| Current Consumption (Normal Operation Mode) | | Iopr | -- | 6 | -- | mA | VDD=2.8V MCLK=24MHZ |
| Current Consumption (Monitor Mode) | | Imon | -- | 4 | -- | mA | VDD=2.8V MCLK=24MHZ |
| Current Consumption (Sleep Mode) | | Islp | -- | 0.03 | -- | mA | VDD=2.8V MCLK=24MHZ |

### 7.3 Block Diagram

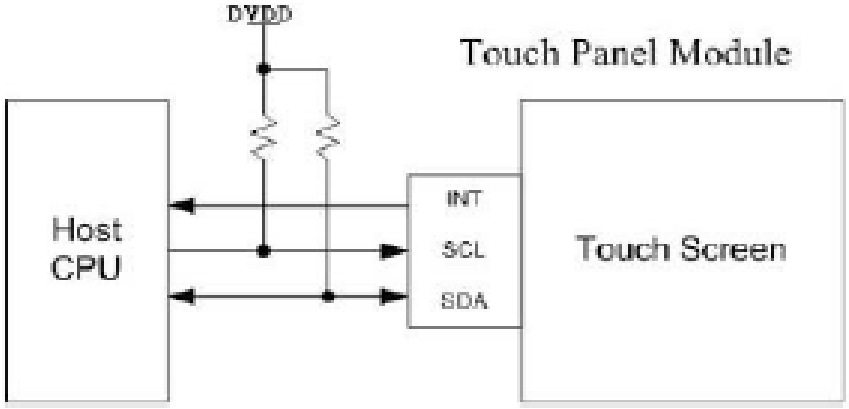


### 7.4 Timer Characteristic

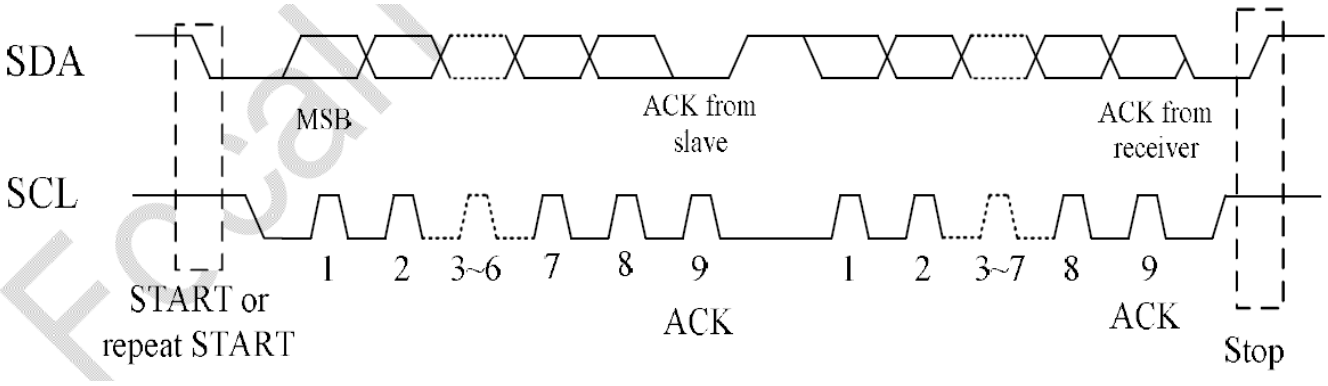


Focal

### 7.5 I2c Protocol

I2C Serial Date Transfer Format

| Parameter | Unit | Min | Max |
|---|---|---|---|
| SCL frequency | KHz | 0 | 400 |
| Bus free time between a STOP and START condition | us | 4.7 | \ |
| Hold time (repeated) START condition | us | 4.0 | \ |
| Data setup time | ns | 250 | \ |
| Setup time for a repeated START condition | us | 4.7 | \ |
| Setup Time for STOP condition | us | 4.0 | \ |

I2C master write, slave read

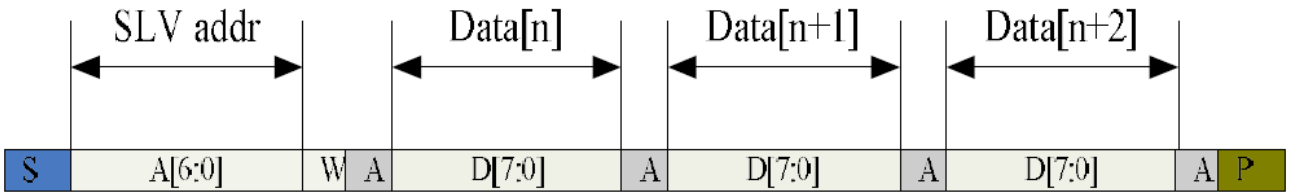


I2C master write, slave write

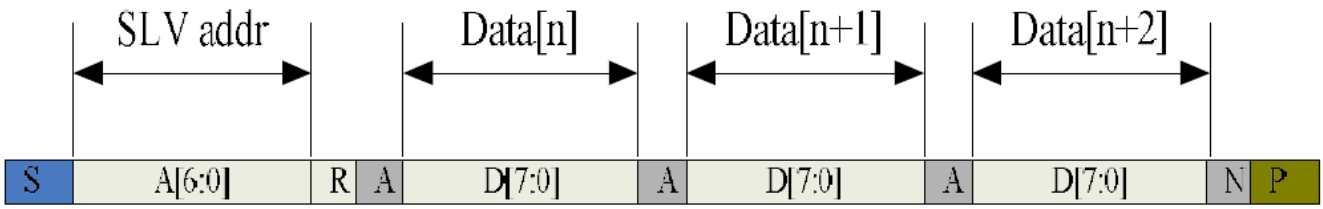


### 7.6 Pin Assignments and Definitions.

| Item | Name | I/O | Unit |
|---|---|---|---|
| 1 | RESET | I | Reset signal input pin |
| 2 | INT | O | I2C interrupt pin |
| 3 | SDA | I/O | I2C data pin |
| 4 | SCL | I | I2C clock pin |
| 5 | GND | P | GND |
| 6 | VDD | P | Analog Power Supply |

## 8 Reliability Condition

No change on display and in operation under the following test condition.

Condition: Unless otherwise specified, tests will be conducted under the following condition.
Temperature: 20±5°C.
Humidity: 65±5%RH.
Tests will be not conducted under functioning state.

| No. | Parameter | Condition | Notes |
|---|---|---|---|
| 1 | High Temperature Operating | 70°C±2°C, 240hrs (Operation state). | |
| 2 | Low Temperature Operating | -20°C±2°C, 240hrs (Operation state). | 1 |
| 3 | High Temperature Storage | 80°C±2°C, 240hrs. | 2 |
| 4 | Low Temperature Storage | -30°C±2°C, 240hrs. | 1,2 |
| 5 | High Temperature and High Humidity Operation Test | 60°C±2°C, 90%, 240hrs. | 1,2 |
| 6 | Vibration Test | Total fixed amplitude: 1.5mm.<br>Vibration Frequency: 10~55Hz.<br>One cycle 60 seconds to 3 direction of X, Y, Z each 15 minutes. | 3 |
| 7. | Drop Test | To be measured after dropping from 60cm high on the concrete surface in packing state.<br> 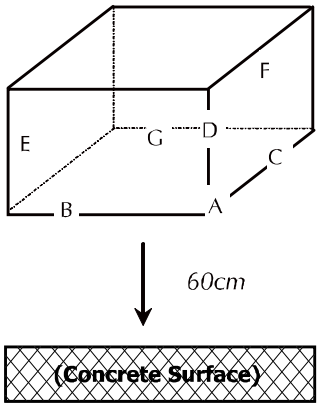 <br><br>*Dropping method corner dropping:*<br>*A corner: Once edge dropping.*<br>*B, C, D edge: Once face dropping.*<br>*E, F, G face: Once.* | |

Notes:
1. No dew condensation to be observed.
2. The function test shall be conducted after 4 hours storage at the normal temperature and humidity after removed from the test chamber.
3. Vibration test will be conducted to the product itself without putting I in a container.

## 9 Dimensional Outlines

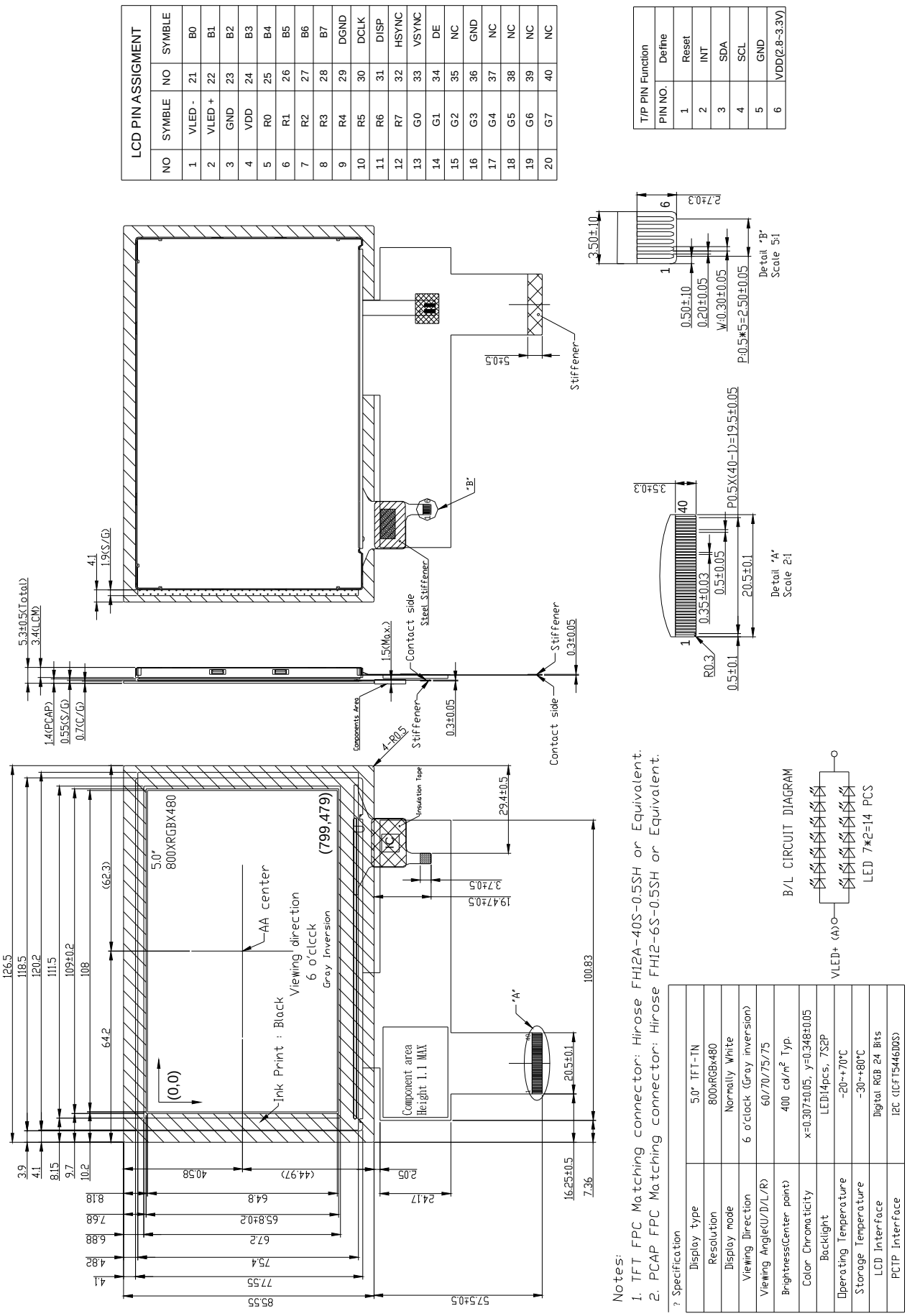


| LCD PIN ASSIGMENT | | | |
|---|---|---|---|
| NO | SYMBLE | NO | SYMBLE |
| 1 | VLED - | 21 | B0 |
| 2 | VLED + | 22 | B1 |
| 3 | GND | 23 | B2 |
| 4 | VDD | 24 | B3 |
| 5 | R0 | 25 | B4 |
| 6 | R1 | 26 | B5 |
| 7 | R2 | 27 | B6 |
| 8 | R3 | 28 | B7 |
| 9 | R4 | 29 | DGND |
| 10 | R5 | 30 | DCLK |
| 11 | R6 | 31 | DISP |
| 12 | R7 | 32 | HSYNC |
| 13 | G0 | 33 | VSYNC |
| 14 | G1 | 34 | DE |
| 15 | G2 | 35 | NC |
| 16 | G3 | 36 | GND |
| 17 | G4 | 37 | NC |
| 18 | G5 | 38 | NC |
| 19 | G6 | 39 | NC |
| 20 | G7 | 40 | NC |

| T/P PIN Function | |
|---|---|
| PIN NO. | Define |
| 1 | Reset |
| 2 | INT |
| 3 | SDA |
| 4 | SCL |
| 5 | GND |
| 6 | VDD(2.8~3.3V) |

Notes:
1. TFT FPC Matching connector: Hirose FH12A-40S-0.5SH or Equivalent.
2. PCAP FPC Matching connector: Hirose FH12-6S-0.5SH or Equivalent.

| ? Specification | |
|---|---|
| Display type | 5.0" TFT-TN |
| Resolution | 800xRGBx480 |
| Display mode | Normally White |
| Viewing Direction | 6 o'clock (Gray inversion) |
| Viewing Angle(U/D/L/R) | 60/70/75/75 |
| Brightness(Center point) | 400 cd/m² Typ. |
| Color Chromaticity | x=0.307±0.05, y=0.348±0.05 |
| Backlight | LED:14pcs, 7S2P |
| Operating Temperature | -20~+70°C |
| Storage Temperature | -30~+80°C |
| LCD Interface | Digital RGB 24 Bits |
| PCTP Interface | I2C (ICFT5446DQS) |

# 10 Incoming Inspection Standards

## 10.1 Inspection and Environment Conditions

### 10.1.1 Inspection Conditions:

(1)Inspection Distance: 35 cm±5cm

(2)View Angle：Light-on Inspection Angle：±5°

Cosmetic Inspection Angle：±45°

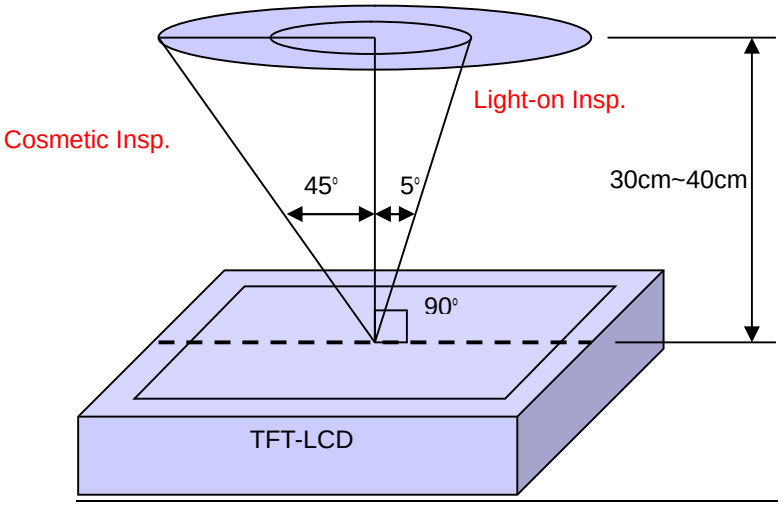


( perpendicular to LCD panel surface)

### 10.1.2 Environment Conditions:

| | | |
|---|---|---|
| Ambient Temperature | | 23°C±5°C |
| Ambient Humidity | | 55±10%RH |
| Ambient Illumination | Cosmetic Inspection | more than 600 Lux |
| | Functional Inspection | 300~500 Lux |

### 10.1.3 Sampling Conditions:

(1) Lot Size: Quantity of shipment lot per model

(2) Sampling Method:

| | | |
|---|---|---|
| Sampling Plan | | MIL-STD-105E |
| | | Normal Inspection, Single Sampling |
| | | Level II |
| AQL | Major Defect | 1.0% |
| | Minor Defect | 1.5% |

(3) The classification of Major(MA) and Minor(MI) defects is shown as 3. Inspection Criteria.

10.1.4 Inspection Criteria

10.1.4.1 Cosmetic Inspection(Panel):

| Item | Judgment Criteria | Classification |
|---|---|---|
| Chipping on Panel | 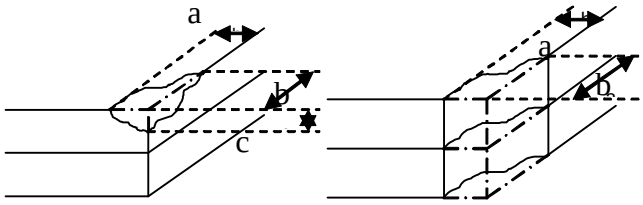 <br>a≦3.0mm、b≦3.0mm、c≦t<br>( Bottom glass thickness) | MA |
| Scratch on Panel<br>*Note-2 | W≦0.05mm or L< 5mm: Ignored<br>0.05mm<W≦0.1mm and L≦5mm: N≦5<br>W>0.1mm or L>5mm: Not allowed | MI |
| Bubble or Dent on Panel<br>*Note-3 | D≦0.2mm: Ignored<br>0.2mm<D≦0.3mm: N≦5<br>D>0.3mm: Not allowed | MI |
| Panel Crack | 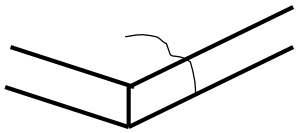 <br>Not Allowed crack | MA |
| Bezel Deformation | Obvious deformation is not allowed. | MI |
| Bezel Oxidation | Not allowed if it rusts continuously over 1 cm (It is out of warranty with rusted tin plate) | MI |
| Bezel Scratch | L≦20mm , W≦0.2 , N≦3 | MI |
| Metal Squash Dent /Flange(Front Side) | D(W)≦1,L≦3,N≦3; | MI |
| B/L High Voltage Wire Denudation | Not allowed | MA |
| Polarizer flaw or leak out resin | Defect is defined as the active area. | MI |
| Outline Dimension | Must in Spec, refer to related product spec. | MI |

10.1.4.2 Functional Inspection:

| Item | Judgment Criteria | | | | Classification |
|---|---|---|---|---|---|
| | Area(Note1) | | I | O | |
| Point Defect | Bright dot | Random | 2 | | MI |
| | | 2 dots adjacent | 0 | 0 | |
| | | 3 dots adjacent or more | 0 | 0 | |
| | Dark dot | Random | 3 | | |
| | | 2 dots adjacent | 0 | | |
| | | 3 dots adjacent or more | 0 | 0 | |
| | Total Dot Defect | | 5 | | |
| | Distance | Distance between Bright and Bright dot | L≧5mm | | |
| | | Distance between Bright and Dark dot | L≧5mm | | |
| | | Distance between Dark dot | L≧5mm | | |
| | (1) It is defined as Point Defect if defect area＞0.5dot<br>(2) It is ignored if defect area≦0.5dot<br>(3)Weak point defect will be defined as Bright Dot if it can be observed through ND filter 5%( Full Screen Black Inspection) | | | | |
| Line Defect | Obvious vertical or horizontal line defect is not allowed. | | | | MA |
| Mura | Not allowed if it can be observed through ND Filter 5 % | | | | MI |
| Foreign Material in spot shape *Note-3 | D≦0.2mm: Ignored<br>0.2mm<D≦0.5mm: N≦8<br>D>0.5mm: Not allowed | | | | MI |
| Foreign Material in line or spiral shape *Note-4 | W≦0.05mm or L≦5mm: Ignored<br>0.05mm<W≦0.2mm and L1.0mm≦5mm: N≦8<br>W>0.2mm or L>5mm: Not allowed | | | | MI |
| Display Function Abnormal | No Malfunction can be allowed | | | | MA |

Note-1： I/O Area Definition

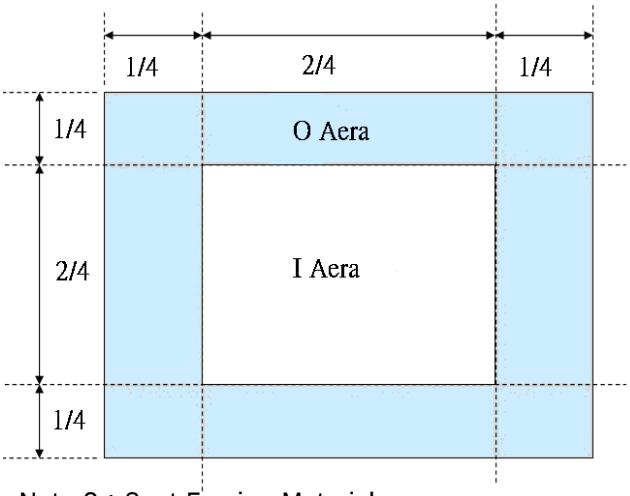


Note-2： Polarizer Scratch

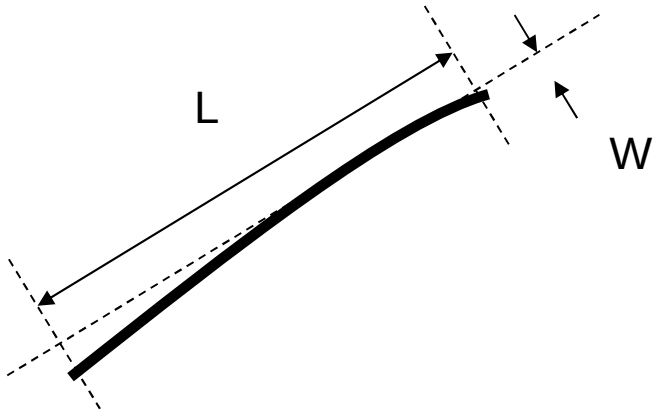


Note-3：Spot Foreign Material
(W ≧L / 4 )

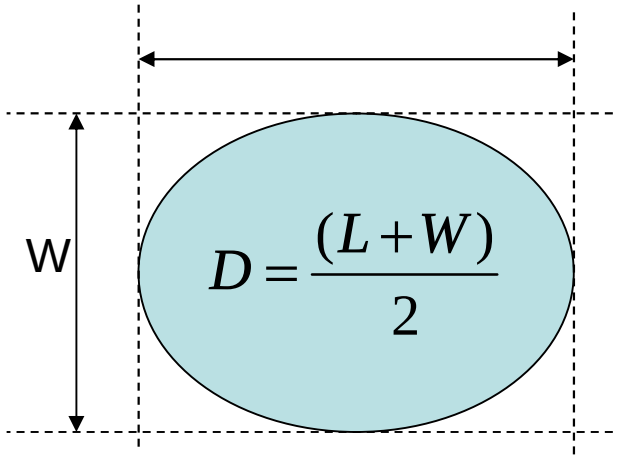

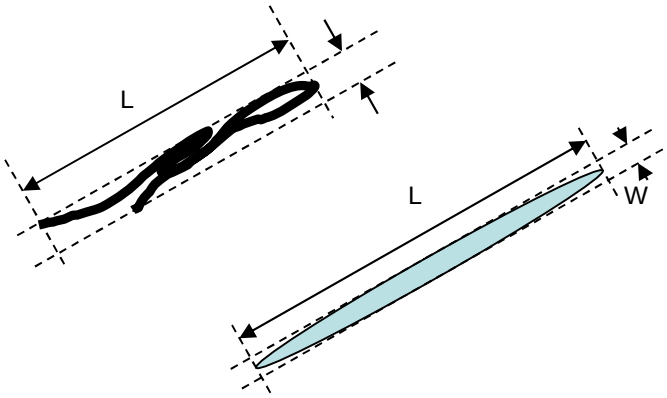
Note-4：Line or Spiral Foreign Material
(W<L / 4)